Dauer MANUFACTURING®

SPECIFICATION SHEET

Type:

Model:

LED Mini Flood Light

SPECIFICATIONS

VOLTAGE:
12 volts AC/DC (120V/277V models also available)

HOUSING:
Sealed cast aluminum. Shroud must be purchased separately.

FINISH:
Architectural bronze. Custom powder coated colors available.

MOUNTING:
Threaded with 1/2” NPT. Heavy-duty composite stake included. May be mounted into threaded hubs in junction boxes or mounting accessories

WIRING:
Pre-wired five-foot 18/2 SPT1 lead.

WARRANTY:
Ten Years.

Optional 4” shroud shown. 6” shroud also available (490701).

Intertek 4009739

Ideal for applications such as landscape lighting, moon lighting, architectural wall washing and sign lighting. 150˚ (7H x 7V) beam. Optional shroud available.

DIMENSIONS:

4W,7W & 12W

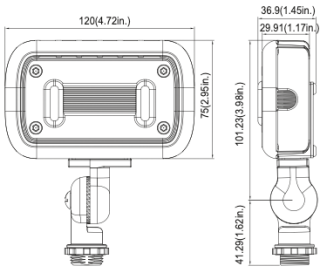

20W

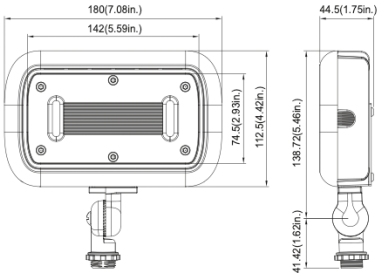

40W

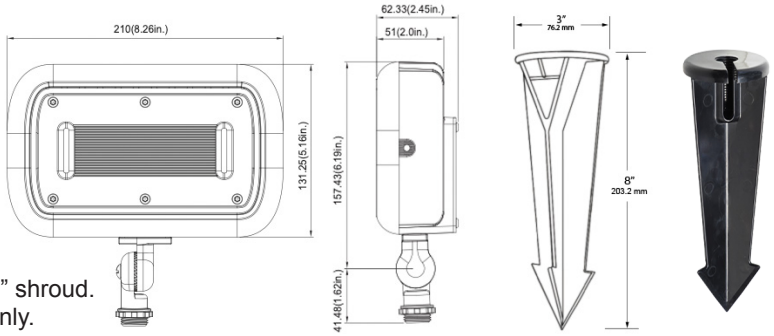

4W, 7W and 12W take 4” and 6” shroud.
20W and 40W take 4” shroud only.

HQ: 10505 NW 112 Ave, Suite 18 | Miami, FL 33178 | Plant: 1430 Gould Blvd, Suite 3 | La Vergne, TN 37086 | 888.DAUER.LED DauerManufacturing.com

Dauer MANUFACTURING®

SPECIFICATION SHEET Page 2
LED Mini Flood Light

LED LAMP SPECIFICATIONS

LAMP TYPE:
Integrated LED.

OPTICS:
Integral optics providing available beam spreads 150˚ (7H x 7V) beam.

COLOR TEMPERATURES:
Color temperature options provide the following qualities: 2700K, 3000K, 4000K or 5000K.

FIXTURE ORDERING INFORMATION
To order a fixture, select the appropriate choice from each column as in the following example:

EXAMPLE: 490684-MS

Intertek
4009739

Model	490680	490681	490682	490683	490684	490685	490664	490668	490686	490687
Description	LED-MF-4W-2700K-12V	LED-MF-4W-3000K-12V	LED-MF-4W-4000K-12V	LED-MF-4W-5000K-12V	LED-MF-7W-2700K-12V	LED-MF-7W-3000K-12V	LED-MF-7W-4000K-12V	LED-MF-7W-5000K-12V	LED-MF-12W-2700K-12V	LED-MF-12W-3000K-12V
Wattage	4W	4W	4W	4W	7W	7W	7W	7W	12W	12W
Lumens	312 lm	348 lm	384 lm	420 lm	544 lm	626 lm	784 lm	805 lm	918 lm	1044 lm
Efficacy	78 lm/W	87 lm/W	96 lm/W	105 lm/W	77.71 lm/W	89.41 lm/W	112 lm/W	115 lm/W	76.53 lm/W	87 lm/W
Volt Amps	4.45 VA	3.89 VA	4.45 VA	4.45 VA	6.98 VA	6.94 VA	6.91 VA	7.75 VA	12.98 VA	13.51 VA
Color Temperature	2700K	3000K	4000K	5000K	2700K	3000K	4000K	5000K	2700K	3000K
CRI	80+	80+	80+	80+	80+	80+	80+	80+	80+	80+
Optional Shroud Ordering #	490698 4” 490701 6”	490698 4” 490701 6”	490698 4” 490701 6”	490698 4” 490701 6”	490698 4” 490701 6”	490698 4” 490701 6”	490698 4” 490701 6”	490698 4” 490701 6”	490698 4” 490701 6”	490698 4” 490701 6”

Mounting

MS Composite stake (incl.) 490034

ATM Aluminum Tapered Surface Mount - 490187

AGM Aluminum Gutter Mount - 490188

AR6 Aluminum 6-In Riser - 490181

AR12 Aluminum 12-In Gutter Mount - 490182

AR24 Aluminum 24-In Gutter Mount - 490183

LED LAMP SPECIFICATIONS

LAMP TYPE:
Integrated LED.

OPTICS:
Integral optics providing available beam spreads 150˚ (7H x 7V) beam.

COLOR TEMPERATURES:
Color temperature options provide the following qualities: 2700K, 3000K, 4000K or 5000K.

FIXTURE ORDERING INFORMATION
To order a fixture, select the appropriate choice from each column as in the following example:

EXAMPLE: 490684-MS

Intertek
4009739

Model	490665	490669	490688	490689	490666	490677	490690	490691	490670	490678
Description	LED-MF-12W-4000K-12V	LED-MF-12W-5000K-12V	LED-MF-20W-2700K-12V	LED-MF-20W-3000K-12V	LED-MF-20W-4000K-12V	LED-MF-20W-5000K-12V	LED-MF-40W-2700K-12V	LED-MF-40W-3000K-12V	LED-MF-40W-4000K-12V	LED-MF-40W-5000K-12V
Wattage	12W	12W	20W	20W	20W	20W	40W	40W	40W	40W
Lumens	1188 lm	1320 lm	1720 lm	1780 lm	1860 lm	2326 lm	4040 lm	4400 lm	4840 lm	4860 lm
Efficacy	99 lm/W	110 lm/W	86 lm/W	89 lm/W	93 lm/W	116 lm/W	101 lm/W	110 lm/W	121 lm/W	121.5 lm/W
Volt Amps	13.04 VA	13.29 VA	22.60 VA	22.43 VA	30.71 VA	22.03 VA	43.13 VA	41.02 VA	45.82 VA	47.55 VA
Color Temperature	4000K	5000K	2700K	3000K	4000K	5000K	2700K	3000K	4000K	5000K
CRI	80+	80+	80+	80+	80+	80+	80+	80+	80+	80+
Optional Shroud Ordering #	490698 4” 490701 6”	490698 4” 490701 6”	490699 4”	490699 4”	490699 4”	490699 4”	490700 4”	490700 4”	490700 4”	490700 4”

Mounting

MS Composite stake (incl.) 490034

ATM Aluminum Tapered Surface Mount - 490187

AGM Aluminum Gutter Mount - 490188

AR6 Aluminum 6-In Riser - 490181

AR12 Aluminum 12-In Gutter Mount - 490182

AR24 Aluminum 24-In Gutter Mount - 490183

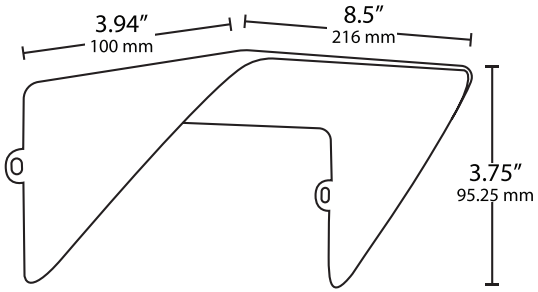

490700 4” Large Shroud

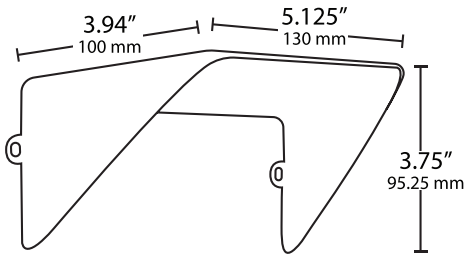

490699 4” Medium Shroud

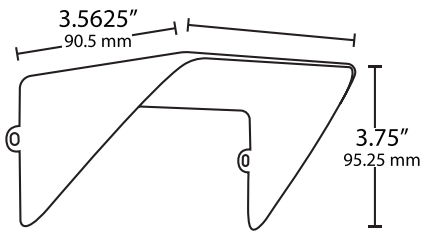

490698 4” Small Shroud

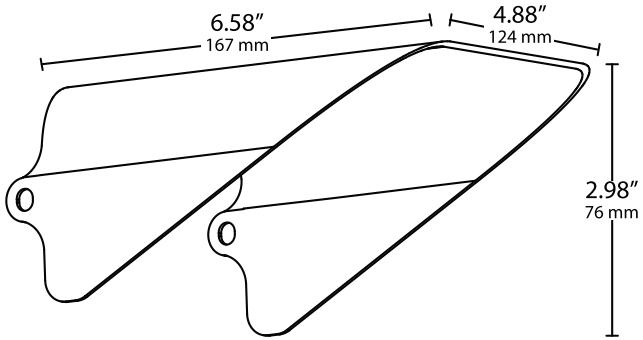

490701 6” Small Shroud

Optional 4” shroud shown.
6” shroud also available
(490701).

Model	490698	490699	490700	490701
Description	4” Small Mini Flood Shroud	4” Medium Mini Flood Shroud	4” Large Mini Flood Shroud	6” Small Mini Flood Shroud
Fits 12V Models	4, 7 and 12W	20W	40W	4, 7 and 12W