Dauer MANUFACTURING®

SPECIFICATION SHEET

Type:

Model:

MOONLIGHT Integrated LED Down Light Fixture

ORDERING CODE:
489841

SPECIFICATIONS

HOUSING:
Cast aluminum with removable shroud.

FINISH:
Architectural bronze. Custom powder coated colors available.

LENS:
Tempered glass.

INTEGRATED LED:
LED array. 10W. 12V/AC/DC. 11.51 VA. 720 lumens. 5700K color temperature.

MOUNTING:
Threaded with 1/2” NPT. May be mounted into threaded hubs in junction boxes or other mounting accessories available.

WIRING:
Pre-wired with a five-foot pigtail of 18/2 cable.

WARRANTY:
Ten years.

ASSEMBLED IN USA

The Moonlight down light features an integrated LED source available in 10 watts. 5700K. 60-degree beam spreads.

DIMENSIONS:

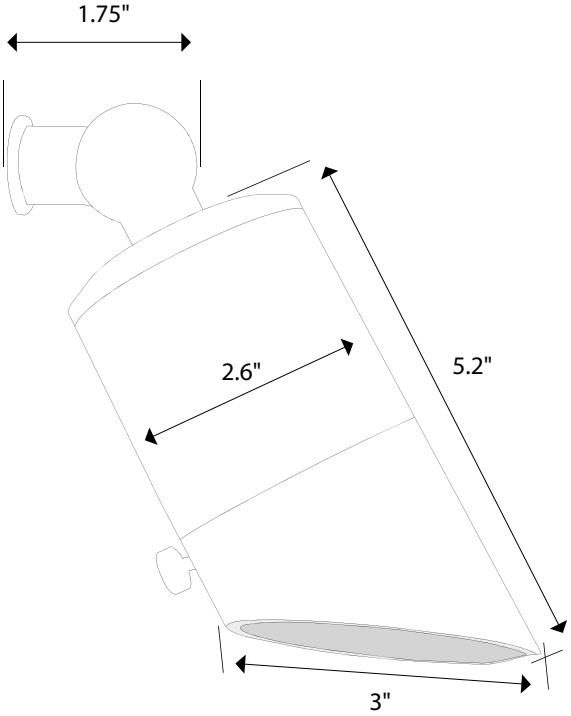

HQ: 10100 NW 116th Way, Suite 14 | Medley, FL 33178 • Plant: 1430 Gould Blvd., Suite 3, La Vergne, TN 37086
800.883.2590 DauerManufacturing.com

20 years strong

LED LAMP SPECIFICATIONS

LAMP TYPE:
Integrated LED.

OPTICS:
Integral optics providing available beam spread 60°.

COLOR TEMPERATURES:
Color temperature options provide the following qualities: 5700K.

ASSEMBLED IN USA

FIXTURE ORDERING INFORMATION
To order a fixture with mounting options, select the appropriate choice from each column as in the following example:

EXAMPLE: 489841-A

MODEL	WATTAGE	VOLT AMPS	BEAM SPREAD	COLOR TEMP	LUMENS	EFFICACY	MOUNTING
489841	10 W	11.51 VA	60°	5700K	720	72 lm/W	**A** Achorage Aluminum Tree Mount - 490189 **MM** Aluminum Micro Surface Mount - 490186