Dauer MANUFACTURING®

SPECIFICATION SHEET

Type:

Model:

BODACIOUS Integrated LED Uplight

SPECIFICATIONS

VOLTAGE:
12V AC/DC

HOUSING:
Cast brass with removable 3” shroud. Optional 6” shroud available.

FINISH:
Weathered brass. Custom powder coated colors available.

LENS:
Tempered glass.

MOUNTING:
Threaded with 1/2” NPT. May be mounted into threaded hubs in junction boxes or mounting accessories. Heavy-duty composite stake included.

WIRING:
Pre-wired with a five-foot pigtail of 18/2 cable.

WARRANTY:
10-year warranty

Opt. 6” extended shroud
3W & 6W
#490260

Opt. 6” extended shroud
8W, 12W & 16W
#490261

c UL us LISTED E233194

The Bodacious uplight features an integrated LED source available in 3, 8, 6,12 or 16 watts. 2700K, 3000K and 5000K options. 30-, 45-, 65- and 100-degree beam spreads.

DIMENSIONS:

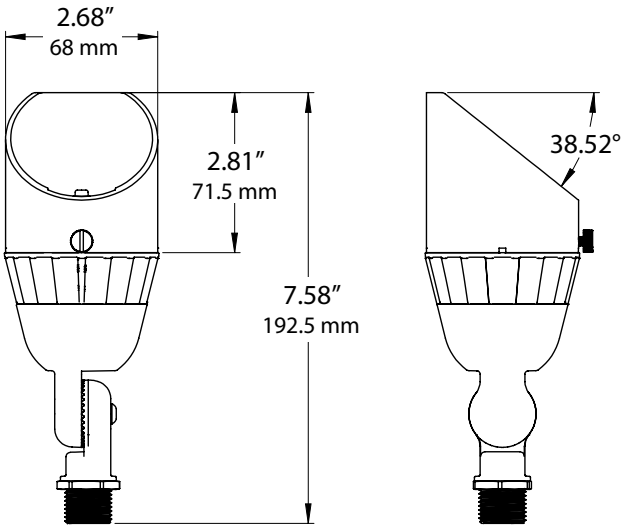

3W/6W

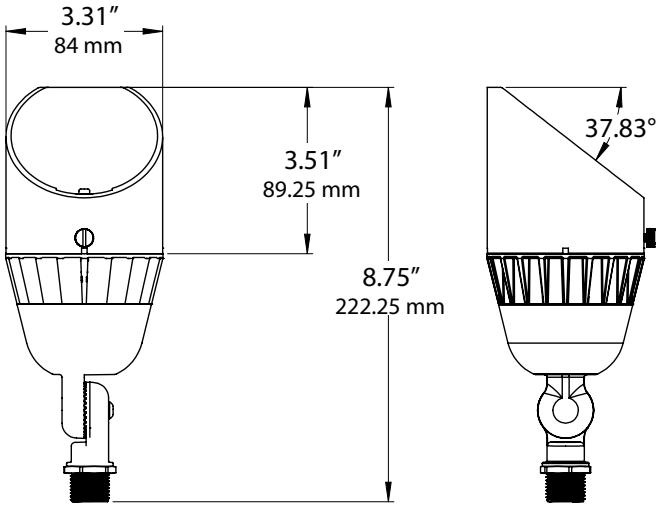

8W/12W/16W

LED LAMP SPECIFICATIONS

LAMP TYPE:
Integrated LED.

OPTICS:
Integral optics providing available beam spread of 30°, 45°, 65° and 100°

COLOR TEMPERATURES:
Color temperature options provide the following qualities:
2700K, 3000K and 5000K.

c UL us LISTED E233194

FIXTURE ORDERING INFORMATION
To order a fixture with mounting options, select the appropriate choice from each column as in the following example:

EXAMPLE: 490020-490261-490039-PM

CODES	WATTAGE	VOLT AMPS	BEAM SPREAD	COLOR TEMP	LUMENS	EFFICACY	CRI	SHROUD	RISERS	MOUNTING
490200	3W	4.83VA	30°	2700K	291lm	88lm/W	80+	490260 Extended Shroud 3W/6W 490261 Extended Shroud 8W/12W/16W	490038 2” brass riser 490039 3” brass riser 490031 6” brass riser 490032 12” brass riser 490033 24” brass riser	**MS** Heavy-duty slotted mounting stake (incl.) 490034 **EX** Excalibur Post Stake 490037 **TR** Trident HD 3-Prong Stake 490036 **PM** Pier Mount 490057 **TSM** Tapered Surface Mount 490048 **EM** Round Electrical Mounting Plate 490043 **RMP** Rectangular Electrical Mounting Plate 490044
490201	3W	5.04VA	45°	2700K	275lm	78lm/W	80+			
490202	3W	4.86VA	65°	2700K	246lm	72lm/W	80+			
490203	3W	5.12VA	100°	2700K	217lm	61lm/W	80+			
490204	3W	5.15VA	30°	3000K	306lm	94lm/W	80+			
490205	3W	5.03VA	45°	3000K	278lm	85lm/W	80+			
490206	3W	5.01VA	65°	3000K	255lm	79lm/W	80+			
490207	3W	5.08VA	100°	3000K	248lm	69lm/W	80+			
490208	6W	10.05VA	30°	2700K	389lm	77lm/W	80+			
490209	6W	9.77VA	45°	2700K	426lm	66lm/W	80+			
490210	6W	9.89VA	65°	2700K	357lm	63lm/W	80+			
490211	6W	9.98VA	100°	2700K	332lm	55lm/W	80+			
490212	6W	10.04VA	30°	3000K	380lm	73lm/W	80+			
490213	6W	9.99VA	45°	3000K	455lm	69lm/W	80+			
490214	6W	9.78VA	65°	3000K	397lm	60lm/W	80+			
490215	6W	9.96VA	100°	3000K	357lm	55lm/W	80+			
490216	8W	10.30VA	30°	2700K	862lm	101lm/W	80+			

CONTINUED FROM PREVIOUS PAGE

CODES	WATTAGE	VOLT AMPS	BEAM SPREAD	COLOR TEMP	LUMENS	EFFICACY	CRI	SHROUD	RISERS	MOUNTING
490217	8W	10.29VA	45°	2700K	796lm	94lm/W	80+	490260 Extended Shroud 3W/6W 490261 Extended Shroud 8W/12W/16W	490038 2” brass riser 490039 3” brass riser 490031 6” brass riser 490032 12” brass riser 490033 24” brass riser	**MS** Heavy-duty slotted mounting stake (incl.) 490034 **EX** Excalibur Post Stake 490037 **TR** Trident HD 3-Prong Stake 490036 **PM** Pier Mount 490057 **TSM** Tapered Surface Mount 490048 **EM** Round Electrical Mounting Plate 490043 **RMP** Rectangular Electrical Mounting Plate 490044
490218	8W	10.28VA	65°	2700K	608lm	72lm/W	80+			
490219	8W	10.26VA	100°	2700K	515lm	61lm/W	80+			
490220	8W	10.14VA	30°	3000K	823lm	98lm/W	80+			
490221	8W	10.13VA	45°	3000K	777lm	93lm/W	80+			
490222	8W	10.10VA	65°	3000K	592lm	71lm/W	80+			
490223	8W	10.10VA	100°	3000K	504lm	61lm/W	80+			
490224	8W	10.53VA	65°	5000K	734lm	84lm/W	80+			
490225	8W	10.54VA	100°	5000K	600lm	69lm/W	80+			
490226	12W	17.48VA	30°	2700K	1184.62lm	90.36lm/W	80+			
490227	12W	17.24VA	45°	2700K	1098.15lm	85.26lm/W	80+			
490228	12W	17.06VA	65°	2700K	869.16lm	68.33lm/W	80+			
490229	12W	17.29VA	100°	2700K	698.67lm	53.91lm/W	80+			
490230	12W	17.23VA	30°	3000K	1198lm	68.33lm/W	80+			
490231	12W	17.51VA	45°	3000K	1127lm	77lm/W	80+			
490232	12W	17.62VA	65°	3000K	889lm	65lm/W	80+			
490233	12W	17.34VA	100°	3000K	730lm	53lm/W	80+			
490234	12W	17.65VA	65°	5000K	973lm	73lm/W	80+			
490235	12W	17.90VA	100°	5000K	788lm	59lm/W	80+			
490236	16W	21.91VA	30°	2700K	1418.90lm	84.66lm/W	80+			
490237	16W	20.79VA	45°	2700K	1263.09lm	79.59lm/W	80+			
490238	16W	22.13VA	65°	2700K	1030.69lm	60.7lm/W	80+			
490239	16W	21.87VA	100°	2700K	881.77lm	52.58lm/W	80+			
490240	16W	22.18VA	30°	3000K	1263.09lm	75lm/W	80+			
490241	16W	22.91VA	45°	3000K	1357lm	71lm/W	80+			
490242	16W	22.38VA	65°	3000K	1074lm	58lm/W	80+			
490243	16W	23.96VA	100°	3000K	886lm	45lm/W	80+			
490244	16W	23.21VA	65°	5000K	1231lm	65lm/W	80+			
490245	16W	23.28VA	100°	5000K	967lm	51lm/W	80+			