Dauer MANUFACTURING®

SPECIFICATION SHEET

Type:

Model:

MIRAGE-V2 Aluminum Integrated LED Uplight

SPECIFICATIONS

HOUSING:
Cast aluminum.

FINISH:
Architectural bronze. Custom powder coated colors available.

LENS:
Tempered glass.

VOLTAGE:
12V AC/DC

WATTAGE:
3W, 6W ,8W, 12W and 16W.

OPTICS:
Beam spread 30˚, 45˚, 65˚, 100˚.

COLOR TEMPERATURE:
2700K, 3000K and 5000K.

MOUNTING:
Stem threaded with 1/2” NPT.

WIRING:
Pre-wired with a five-foot pigtail of 18/2 cable.

WARRANTY:
Ten years.

489146
Opt. Extended Shroud
(3W/6W)

489147
Opt. Extended Shroud
(8W/12W/16W)

c UL us LISTED E233194

The Mirage-V2 features an integrated LED source. 2700K, 3000K and 5000K color temperatures. 30˚, 45˚, 65˚, 100˚ beam spreads.

DIMENSIONS:

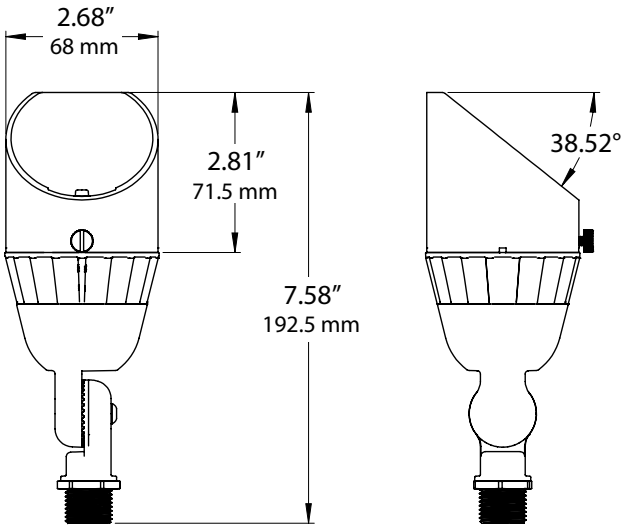

3W/6W

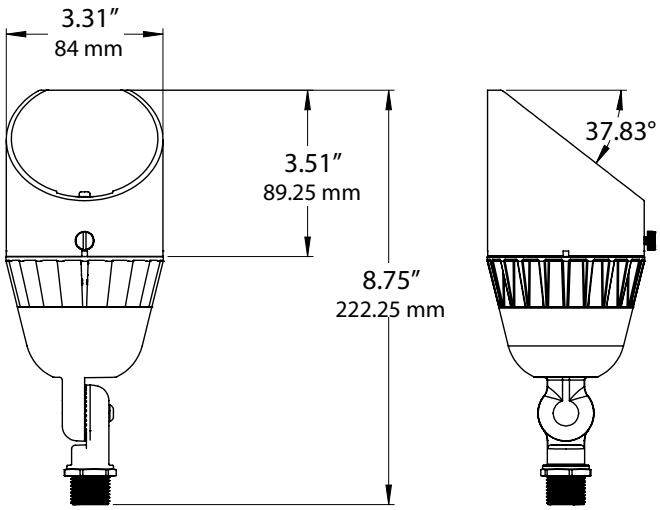

8W/12W/16W

LED LAMP SPECIFICATIONS

LAMP TYPE:
Integrated LED.

OPTICS:
Integral optics providing available beam spreads of 30˚, 45˚, 65˚, 100˚.

COLOR TEMPERATURES:
2700k, 3000K and 5000K.

c UL us LISTED E233194

FIXTURE ORDERING INFORMATION
To order a lamped fixture with mounting options, select the appropriate choice from each column as in the following example:

EXAMPLE: 489100

Model	489100	489101	489102	489103	489104	489105	489106	489107
Description	Mirage-V2-3W-12V-27K-30D	Mirage-V2-3W-12V-27K-45D	Mirage-V2-3W-12V-27K-65D	Mirage-V2-3W-12V-27K-100D	Mirage-V2-3W-12V-30K-30D	Mirage-V2-3W-12V-30K-45D	Mirage-V2-3W-12V-30K-65D	Mirage-V2-3W-12V-30K-100D
Wattage	3W	3W	3W	3W	3W	3W	3W	3W
Lumens	290.1 lm	276.3 lm	245.9 lm	215.3 lm	304.1 lm	280.1 lm	253.2 lm	249.5 lm
Efficacy	95.7 lm/W	90.63 lm/W	80.66 lm/W	70.63 lm/W	99.77 lm/W	91.89 lm/W	83.07 lm/W	82.95 lm/W
Volt Amps	3.93 VA	3.94 VA	3.93 VA	3.94 VA	3.95 VA	3.95 VA	3.95 VA	3.92 VA
Color Temperature	2700K	2700K	2700K	2700K	3000K	3000K	3000K	3000K
CRI	80+	80+	80+	80+	80+	80+	80+	80+
Beam Spread	30˚	45˚	65˚	100˚	30˚	45˚	65˚	100˚

LED LAMP SPECIFICATIONS

LAMP TYPE:
Integrated LED.

OPTICS:
Integral optics providing available beam spreads of 30˚, 45˚, 65˚, 100˚.

COLOR TEMPERATURES:
2700K, 3000K and 5000K.

c UL us LISTED E233194

FIXTURE ORDERING INFORMATION
To order a lamped fixture with mounting options, select the appropriate choice from each column as in the following example:

EXAMPLE: 489108

Model	489108	489109	489110	489111	489112	489113	489114	489115
Description	Mirage-V2-6W-12V-27K-30D	Mirage-V2-6W-12V-27K-45D	Mirage-V2-6W-12V-27K-56D	Mirage-V2-6W-12V-27K-100D	Mirage-V2-6W-12V-30K-30D	Mirage-V2-6W-12V-30K-45D	Mirage-V2-6W-12V-30K-65D	Mirage-V2-6W-12V-30K-100D
Wattage	6W	6W	6W	6W	6W	6W	6W	6W
Lumens	387.2 lm	424.0 lm	358.9 lm	328.9 lm	378.1 lm	454.8 lm	394.8 lm	358.6 lm
Efficacy	61.02 lm/W	67.24 lm/W	56.84 lm/W	52.17 lm/W	59.59 lm/W	71.55 lm/W	62.23 lm/W	56.52 lm/W
Volt Amps	6.87 VA	6.83 VA	6.88 VA	6.47 VA	6.85 VA	6.52 VA	6.50 VA	6.50 VA
Color Temperature	2700K	2700K	2700K	2700K	2700K	2700K	3000K	3000K
CRI	80+	80+	80+	80+	80+	80+	80+	80+
Beam Spread	30	45˚	65˚	100˚	30˚	45˚	65˚	100˚

LED LAMP SPECIFICATIONS

LAMP TYPE:
Integrated LED.

OPTICS:
Integral optics providing available beam spreads of 30˚, 45˚, 65˚, 100˚.

COLOR TEMPERATURES:
2700K, 3000K and 5000K.

c UL us LISTED E233194

FIXTURE ORDERING INFORMATION
To order a lamped fixture with mounting options, select the appropriate choice from each column as in the following example:

EXAMPLE: 489120

Model	489120	489121	489122	489124	489125	489130	489131	489132
Description	Mirage-V2-8W-12V-30K-30D	Mirage-V2-8W-12V-30K-45D	Mirage-V2-8W-12V-30K-65D	Mirage-V2-8W-12V-5K-65D	Mirage-V2-8W-12V-5K-100D	Mirage-V2-12W-12V-30K-30D	Mirage-V2-12W-12V-30K-45D	Mirage-V2-12W-12V-30K-65D
Wattage	8W	8W	8W	8W	8W	12W	12W	12W
Lumens	793.2 lm	754.0 lm	604.3 lm	721.7 lm	600.5 lm	1199.4 lm	1125.9 lm	889.9 lm
Efficacy	99.94 lm/W	94.19 lm/W	76.35 lm/W	87 lm/W	72.4 lm/W	99.5 lm/W	93.8 lm/W	74.15 lm/W
Volt Amps	8.65 VA	8.73 VA	8.63 VA	10.2 VA	10.1 VA	14.72 VA	14.76 VA	14.74 VA
Color Temperature	3000K	3000K	3000K	5000K	5000K	3000K	3000K	3000K
CRI	80+	80+	80+	80+	80+	80+	80+	80+
Beam Spread	30	45˚	65˚	65˚	100˚	30˚	45˚	65˚

LED LAMP SPECIFICATIONS

LAMP TYPE:
Integrated LED.

OPTICS:
Integral optics providing available beam spreads of 30˚, 45˚, 65˚, 100˚.

COLOR TEMPERATURES:
2700K, 3000K and 5000K.

c UL us LISTED E233194

FIXTURE ORDERING INFORMATION
To order a lamped fixture with mounting options, select the appropriate choice from each column as in the following example:

EXAMPLE: 489133

Model	489133	489134	489135	489140	489141	489142	489143	489144	489145
Description	Mirage-V2-12W-12V-30K-100D	Mirage-V2-12W-12V-50K-65D	Mirage-V2-12W-12V-50K-100D	Mirage-V2-16W-12V-30K-30D	Mirage-V2-16W-12V-30K-45D	Mirage-V2-16W-12V-30K-65D	Mirage-V2-16W-12V-30K-100D	Mirage-V2-16W-12V-50K-65D	Mirage-V2-16W-12V-50K-100D
Wattage	12W	12W	12W	16W	16W	16W	16W	16W	16W
Lumens	729.1 lm	974.1 lm	787 lm	1428.6 lm	1355.2 lm	1070.7 lm	883.8 lm	1228.2 lm	968.8 lm
Efficacy	60.76 lm/W	81.18 lm/W	65.58 lm/W	89.29 lm/W	84.7 lm/W	66.92 lm/W	55.24 lm/W	76.76 lm/W	60.55 lm/W
Volt Amps	14.69 VA	14.35 VA	14.35 VA	19.03 VA	19.05 VA	19.01 VA	19.00 VA	19.42 VA	19.45 VA
Color Temperature	3000K	5000K	5000K	3000K	3000K	3000K	3000K	5000K	5000K
CRI	80+	80+	80+	80+	80+	80+	80+	80+	80+
Beam Spread	100˚	65˚	100˚	30˚	45˚	65˚	100˚	65˚	100˚